X-35 International OD Class

Minute
International Board Meeting
Sanremo 22nd November 2014

Countries	2014 Members	Votes	Assistance
Denmark	4	2	Martin Moe
Holland	8	3	Per Holgerson
Italy	14	3	Alessandro Solerio
Japan	9	3	
Norway	9	3	Martin Moe
Sweden	16	3	Per Holgerson
Other Countries	8	0	Miquel Colomer
X-Yachts		3	Per Holgerson

Total votes represented 17 Total voting right 20
They are also present at the meeting Mrs. Teresa Rios Sànchez (International Measurer), Mr Alberto Batacchi (Italian National Class) Mr. Michele Malandra (sail design) and Mr. Ferran Aguirre.

1. COSTITUTION OF APPROVAL PANEL (Class rule C.2.5)

Candidates:
Swedish National Class has nominated Per Tengå Driver Owner hull 142 :
Norway National Class has nominated Bjørn VadHolm Owner Driver Nor 21:
Spanish National Class has nominated Miquel Colomer Owner Driver hull 163
Italian National Class has nominated Matteo Scandolera Driver Owner hull 199
Danish National Class has nominated René Lokesgaard

Norway withdraw his candidate.
International Board approve these 4 candidates.
International Board decide for a 2-years period for member of Approval Panel.

2. International Measurer

Miquel Colomer endorses Mrs. Teresa Rios Sànchez.
International Board appoint to X-35 International Measurer Mrs. Teresa Rios Sànchez

3. Proposal for Class rules A.11 A.13

A.11 HULL CERTIFICATION

A.11.1 A **certificate** shall record the following information:

(a) Class
(b) X-Yachts A/S ~~and the Danish sailing federation (DS)~~
~~(c) Sail number issued by the **certification authority**~~
~~(d) Owner~~
(c~~e~~) **Hull** identification
(d~~f~~) Builder/Manufacturers details
~~(g) Date of issue of initial **certificate**~~
(e~~h~~) Date of issue of **certificate**

The red Printed proposal are approved

A.13 VALIDITY OF CERTIFICATE

A.13.1 A **hull certificate** becomes invalid upon:

(a) significant repair or replacement to the **hull**, **keel**, **rudder** or **spar** and the change to any items recorded on the **hull certificate** as required under A.11.
(b) the date of expiry
(c) withdrawal by the **certification authority**
(d) the issue of a new **certificate**
~~(e) change of ownership~~

The red Printed proposal are approved

4. Proposal for Class rules D.2.3 E.2.3 D.2.7.1 and Appendix H8

D.2.3 MODIFICATIONS, MAINTENANCE AND REPAIR

If any **hull** is modified in any other way than described in Section C an official measurer shall verify ~~on the **certificate**~~ that the external shape is the same as before the repair and that no substantial stiffness, or other, advantage has been gained as a result of the repair. The official measurer shall also describe the details of the repair on the measurement **certificate** Appendix H8.

The red Printed proposal are approved

E.2.3 MODIFICATIONS, MAINTENANCE AND REPAIR

If any **hull appendages** are modified beyond that permitted in Section C an official measurer shall verify ~~on the **certificate**~~ that the external shape is the same as before the repair and that no substantial stiffness, or other, advantage has been gained as a result of the repair. The official measurer shall also describe the details of the repair on the measurement **certificate** Appendix H8.

The red Printed proposal are approved

D.7.1 FITTINGS

(b) OPTIONAL
Options listed can be part of the Measurement **Certificate**
(see also Section C5. and appendix H7):
(1) Spray hood deck fittings
(2) 2 Cabinets in saloon
(3) Cooling compressor
(4) Heating system
(5) Hotwater container
(6) Holding tank installation
(7) Radio/CD with loudspeakers
(8) Cockpit loudspeakers
(9) Unrestricted Electronic Instruments
(10) Shower in cockpit
(11) Other permanently mounted equipment such as lee cloth, saltwater system etc. with authorization from technical committee

The red printed proposal point D.7.1 (b)(11) are approved. The proposal point D.7.1 (b)(2) are not approved. Consequently have to be modified appendix H7 and H8.
The new Appendix H8 are approved.

5. Proposal for Class rules C.2.1 C.4.1.2

C.2.1 LIMITATIONS

(Note the ERS definition of crew includes the helmsman)
(a) The ISAF Sailor classification, Reg 22, shall apply. The **crew** shall consist of no more than 2 persons either unclassified or classified Group 3. All other **crew** shall hold a valid Group 1 ~~or Group 2~~ classification.
Competitors without a current classification, or whose employment circumstances have changed, may apply for a new certificate electronically from the ISAF website www.sailing.org/isafsailor.
(b~~a~~) The crew shall consist of minimum 5 persons.
(c~~b~~) No crew member shall be substituted during an event, unless substitution is authorized by the Race Committee.
(d~~b~~) The crew list may be required by the notice of race for an event. For the World & Continental Championships a copy of the crew list should be sent to the Organising Authority and the ICA not later than two weeks before the start of the event, The crew list form is is approved by X-35 ICA ~~contained within appendix H.10.~~
~~(c) At events that requires a crew list the crew may not be substituted without the approval of the Race Committee.~~

The red Printed proposal are approved. The Appendix H.10 is missing.

C.4.1 **LIMITATIONS**

Advertising shall only be displayed in accordance with ~~Category C of~~ the ISAF Advertising Code.

C.4.2 In addition to advertising permitted in C 4.1 the Class may request the following:
(a) The **boat** type to be displayed on each side of the coaming as fitted by the builder

(b) The builders name and logo to be displayed on each side of the cabin roof as fitted by the builder

(c) The Class International board may request display of event advertising on the **hull** within ISAF Advertising Code ~~20.3 (d).~~

The red Printed proposal are approved

6. Proposal for changing Appendix H4 and solutions regarding vertical templates 1412 -300 issues.

Appendix H4, introducing principles for the utilization of vertical templates, proposal by Niels Ditmar in August 2011, are approved

Regarding vertical templates 1412-300:
International Board approve and confirm Chairman's decision (mail 18/05/14 and test at world 2014).
International Board ask X-Yachts for a set 1412-300 template (Ditmar proposal) to test.

7. Proposal for Class rules G.3.3 (a), G.4.1 (a) and G.5.1 (a)

The proposal are not approved.
International Board ask Technical Committee and X-35 International Measurer Mrs. Teresa Rios to investigate introducing new materials for sails and report about conclusion.

8. Proposal for Class rule G.3.5

The proposal are not approved.

9. Proposal for Class rule G.4.3

Mrs. Rios report her experience during pre-check world 2012 about Jib's minimum luff length (rules G.4.3 and G.5.3) and ask to take off minimum luff length in these rules. Mr. Batacchi confirm the same problem during pre-check in World 2008, 2010 2014 and European 2011. AGM Nice 2010 already reduce minimum luff lenght, but X-Yachts refuse to write off the luff minimum length.
International Board decide to ask X-Yachts about luff minimum length.
If X-Yachts do not have reasonable opposites grounds the minimum luff length of rules G.4.3 and G.5.3 will be write off.

G.4.3 DIMENSIONS

	~~minimum~~	maximum	
Luff length	~~14200 mm~~	14600	mm
~~Foot length~~		~~4750~~	~~mm~~
Luff Perpendicular		4400	mm

G. 5.3 DIMENSIONS

	~~minimum~~	maximum	
Luff length	~~14050 mm~~	14450	mm

The red Printed proposal are approved

10. Anchor windlass and anchor's bow storage

AGM recognizes that there is a problem of use the anchor and believes necessary to preserve One Design philosophy but promote the different uses of the boat. AGM not have enough information about structural problem on allowed anchor windlass and anchor's bow storage. Some owners try to find a solution with a removable bowsprit. AGM decide to finance the project of a mold to reduce the costs of implementation of this accessory in close cooperation with X-Yachts.

11. Osmoses on rudder

AGM San Remo recognizes that there is a widespread osmosis problem with the rudders. AGM shall address the task of finding a way to deal with in close cooperation with X-Yachts.

Accepted solutions may include setting up and managing non—profit management of equipment and contacts for repair, production and/or verification processes.

12. World Championship 2015/2016

2015 Denmark during X-Yachts Gold Cup 12-18 of July 2015

2016 Italy - End of August - Follonica Gulf - Tuscany (YC Punta Ala or CN Scarlino)

The X-35 International Association 2015 Chairman will be Denmark Chairman, today René Lokesgaard also Approval Panel member. Consequently AGM consider Bjørn VadHolm Owner Driver Nor 21 deputy member of Approval Panel.

The reserve day will be write off (Guidelines for event)

13. European Championship and regional Championship

International Board confirm Dusseldorf's decision do not race Continental Championship.

14. Chairman's Report 2014

The Chairman will write at the end of his duty.

15. Annual Accounts 2014

Approved

The Chairman invited the national classes perform audits of payment International Class Fee during class' event

16. Profit and loss, annual payment per member 2015, budget 2015

The 2015 international subscription fee will be €60 per registered national member. The National Associations or the owner shall pay the fee not later than 1 June 2015.

The payment for X-35 Secretariat is decrease from € 2.000 to € 1.000.

The budget will be made available:

€ 3.000 for Osmoses on rudder "research projects"

€ 2.000 for Bowsprit "research projects"

Alessandro Solerio

Chairman of board X-35 International Class

Chairman of board X-35 Italian National Class

X-35 International Accounts 31th December 2014

Date	Voucher no.	Income:	DKK	EUR	EUR	
22-11-2013		Membership Amparo Pilates Soc.	445,80		60,00	###
06-01-2014		Interests X-35 Club DB	26,90		3,62	
04-03-2014		Membership fee hull 121 Pallechi Andrea	445,80		60,00	
06-03-2014		Membership Sula Assets, Ukraine hull 11	445,80		60,00	
20-05-2014		Membership fee RUS 211 symfony	445,80		60,00	
16-07-2014		Membership fee hull 80 Spain	445,80		60,00	
29-07-2014		Membership fee Italy	6.241,20		840,00	
29-07-2014		Membership fee Teemu,Mikko, Finland, Ingo, CH, Thomas, Germany	1.783,20		240,00	
01-10-2014		Membership fee Jose Dasit, Spain	445,80		60,00	
06-10-2014		Membership fee Holland	3.566,40		480,00	
07-10-2014		Membership fee Japan	4.012,20		540,00	
09-10-2014		Membership fee Sweden	7.132,80		960,00	
14-10-2014		Membership fee Norway	4.012,20		540,00	
14-10-2014		Membership fee Denmark	1.800,00		242,26	
					-	
					-	
					-	
					-	
					-	
		Total Income:	31.249,70		4.205,88	
		Cost:				
29-07-2014		Italian Owner Ass. Contribute World Cham.	18.701,31	2.517,00		
26-09-2014		Visuel Print, flag	7.750,00	1.043,07		
15-01-2014		North Sails stickers	1.000,01	134,59		
01-01-2014		Invoice b. 669460 International Sailing Ltd	2.012,38	270,85		
22-10-2014		Secretary and management	14.860,00	2.000,00		
				0,00		
		Total Cost:	44.323,70	5.965,50		
		Result		-1.759,62		
		Balance				
		Assets				
		Receivable X-Yachts	118.520,83	15.907,77		
		Assets total		15.907,77		
		Liabilities				
		Own capital		17.667,39		
		Result of the year		-1.759,62		
		New Own capital		15.907,77		
		Due X-Yachts		0,00		
		Liabilities total		15.907,77		

Marianne Toft Hansen
X-35 Treasurer

Alessandro Solerio
X-35 Chairman 2014

was not included in the 2013 accounts as the account was sent out before his payment!!

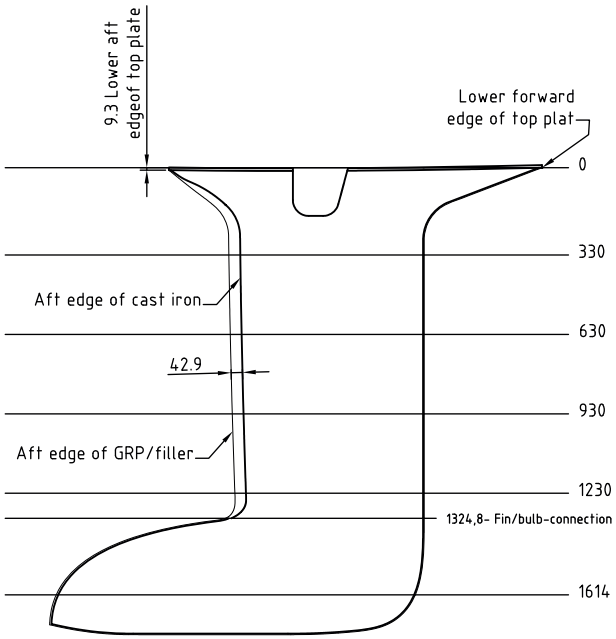

Principle of maximum templates for the X-35
Scale 1:5

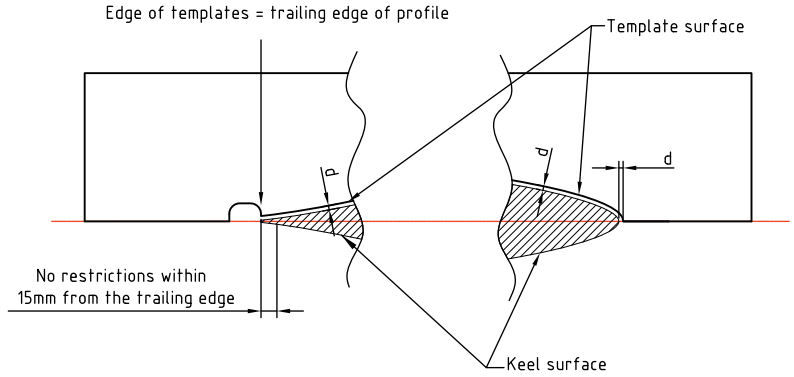

Distance d: 0mm ≤ d ≤

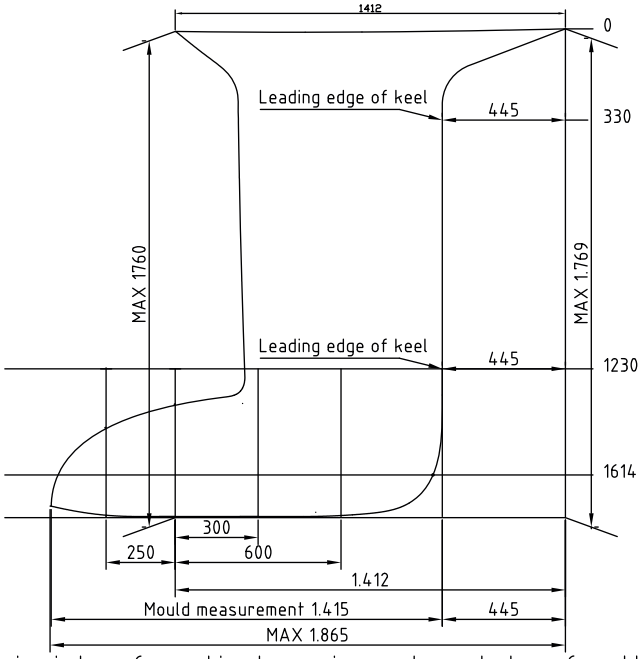

Principle of vertical maximum templates for the X-35 keel

Top vertical templates between level 1225 and 1230

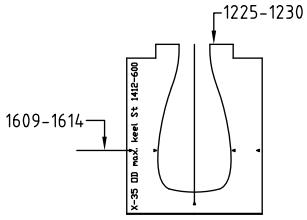

Distance d: 0mm ≤ d ≤ 4mm

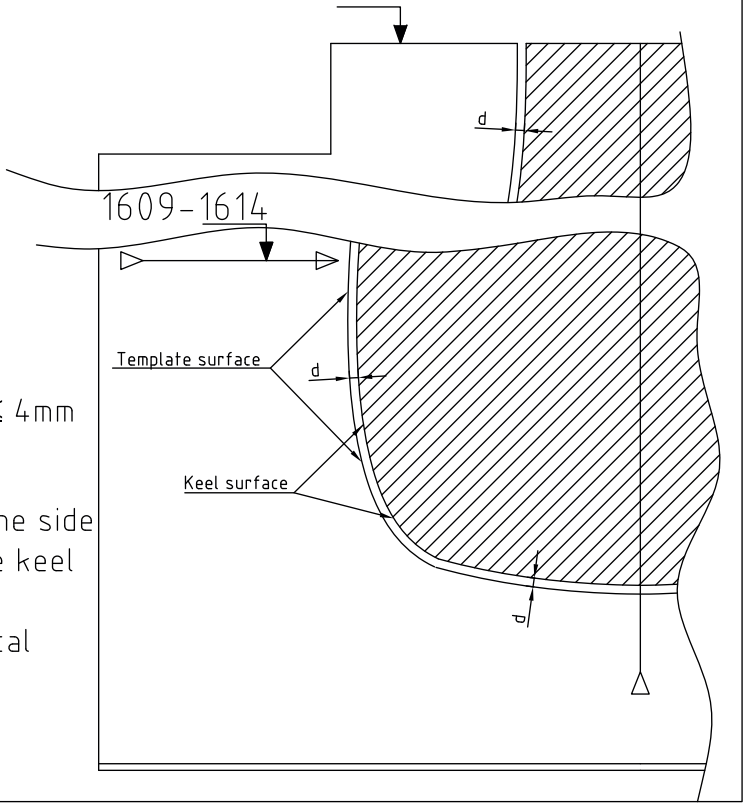

The radius between the side and the bottom of the keel must be radius=7 mm on the maximum vertical template in station 1412-300, 1412 and 1412+300 mm

Approved
AGM San Remo 2014

Yacht	Description
X-35	Keel Position of max template
H4 Pag 1/2 Rev. A	Date Issued 2014.11.22

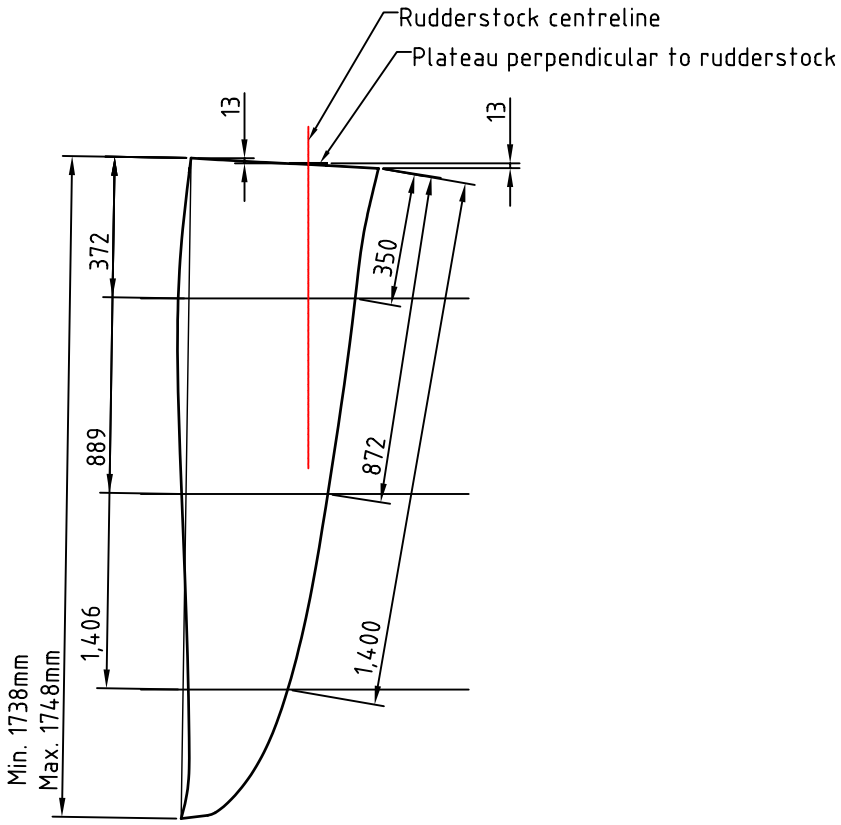

Principle of maximum rudder templates for the X-35
Scale 1:5

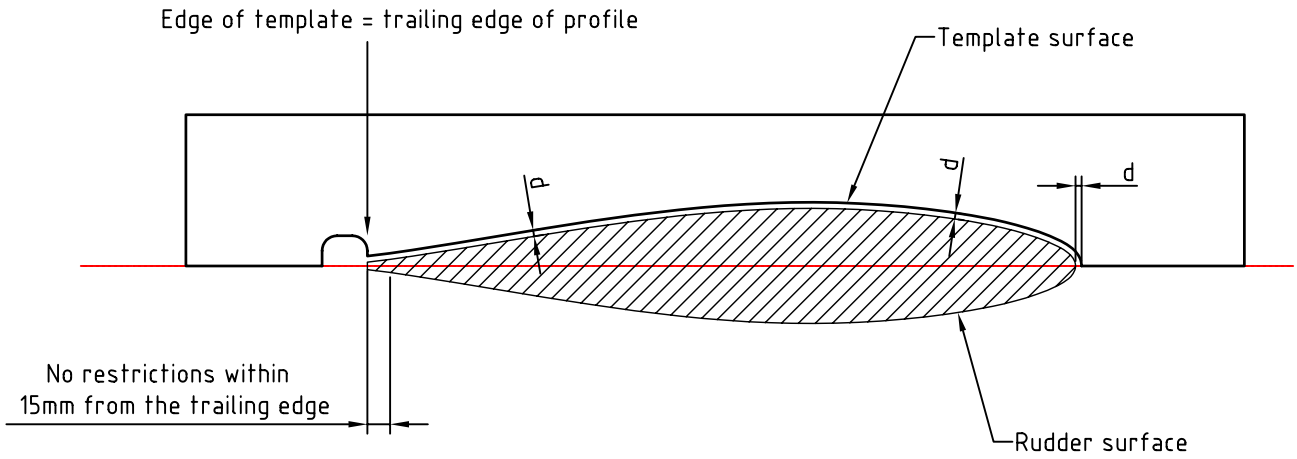

Distance d: 0mm ≤ d ≤ 4mm

X-Yachts
WORLD CLASS SINCE 1979
Fjordagervej 21 - Box 104 - DK-6100 Haderslev - Denmark
Tel.Int +45 74 52 10 22 - Fax.Int.+45 74 53 03 97
e-mail: Info@x-yachts.com - WWW.x-yachts.com

Yacht	Description	
X-35	Position of max templates	
Drawing Number	Scale	Date Issued
H4 - 2/2	1:20	2006.01.06

EQUIPMENT X-35 ONE DESIGN
Standard equipment included in class weight
Anchor and anchor warp
Mast
Rig
Boom
Vang incl strop
Cunningham incl 3 blocks
Mainsheet
3 blocks for mainsheet
Sheet for "main traveller"
Reef 1 rope
Backstay incl blocks
Haul for genoa cars
Cunningham
Mainsail halyard
Combi halyard STB + Port
Genoa halyard
Emergency tiller
8 blocks at mast collar

Permanently mounted optional equipment can be included in the class weight	**Items below shall be logged in weight certificate if they are part of yachts' class weight requirement**
Hot water installation	
Chart plotter	
Cooling compressor	
Heating system	
Holding tank with fittings	
Radio/CD with speakers	
2 cockpit loudspeakers	
Electronic instrumentation	
Magnetic compass	
Primer	
Antifouling	
Sprayhood fittings permanently mounted	
Autopilot drive	
Shower in cockpit	
Race package excl pole and sheets	
Two Cabinets in saloon	

Standard equipment that may be removed while racing and is NOT part of class weight
Saloon table
Loose seat cushions in saloon

Equipment that is NOT part of class weight
Spinnaker pole
Spinnaker sheets
Spinnaker guy sheets
Winch handles
Mooring ropes
Fender
Genoa sheets
Shore power cable
Barberhaul ropes
Downhaul ropes
Hoist strop
Boom cover
Spare sheets

MEASUREMENT CERTIFICATE

X-35 ONE DESIGN

BUILDER'S DECLARATION
This X-35 did comply with the edition of the X-35 International Class Rules which were valid at the time the yacht was built in respect to the construction manual.

Date:	Builder's representative:

X-35 Hull No:	Year of construction:

OWNER'S DECLARATION
I undertake to race this X-35 only as long as I maintain it strictly in accordance with the valid class rules.

Date:	Owner's signature:

YACHT'S NAME:	YACHT CLUB:
YACHT'S FIRST SAIL NO:	YACHT'S CURRENT SAIL NO:

OWNER'S NAME:

ADDRESS
Street:
Postal code:
Town:
Country:

AUTHORITY'S CONFIRMATION OF VALIDITY OF THIS CERTICATE

☐ By a representative of the ***REGIONAL/NATIONAL X-35 CLASS ASSOCIATION*** if the yacht has already been measured by an official measurer and got a valid measurement certificate issued by a national authority

OR

☐ By a ***MEASURER APPOINTED BY THE NATIONAL AUTHORITY*** if the yacht has not yet been measured.

I have checked or measured according to the following documents:

A) X-35 Measurement form for yacht's weight (page 3-5)
B) ERS and X-35 International Class Rules PART II

Date:	Signature:

Authority:	Stamp:
Name of the undersigned: Position: ADDRESS Street: Postal code: Town: Country:	

CHANGE OF OWNERSHIP - BOAT

X-35 ONE DESIGN

NEW OWNER'S NAME:

ADDRESS
Street:
Postal code:
Town:
Country:

NEW OWNER'S DECLARATION

I undertake to race this X-35 only as long as I maintain it strictly in accordance with the valid X-35 Class Rules.

Date:	Owner's signature

NEW OWNER'S NAME:

ADDRESS
Street:
Postal code:
Town:
Country:

NEW OWNER'S DECLARATION

I undertake to race this X-35 only as long as I maintain it strictly in accordance with the valid X-35 Class Rules.

Date:	Owner's signature

NEW OWNER'S NAME:

ADDRESS
Street:
Postal code:
Town:
Country:

NEW OWNER'S DECLARATION

I undertake to race this X-35 only as long as I maintain it strictly in accordance with the valid X-35 Class Rules.

Date:	Owner's signature

MEASUREMENT FORM FOR WEIGHT

X-35 ONE DESIGN

A qualified measurer from the National Sailing Association shall on the X-35 owner's account have the yacht's weight recorded together with the permanently installed equipment.

This measurement form shall be sent to:

Your regional/national X-35 Class Association or the International X-35 Class Association (until your National X-35 Class Association has been set up).

A copy is to be carried on board of your yacht at all times.

OWNER'S NAME:
ADDRESS
Street:
Postal code:
Town:
Country:

Phone:	Mobile phone:

Email:	**Signed by**	
	Measurer	**Owner**
The datum weight of the yacht shall be a minimum of 4490 kg with the standard equipment and the optional equipment acc. to appendix H7 of the international class rule (outlined on page 4/5 of this MEASUREMENT FORM).		
Measurer and owner declare that the recorded items on page 4/5 of this MEASUREMENT FORM have been onboard during measurement		
Water tank shall be empty		
Diesel tank shall be full during weight measurement. **42 kg** shall be deducted from actual weight of yacht		
Position of anchor and anchor warp according to class rules appendix H.9		
Weight of anchor and anchor warp in kg, if not the standard anchor and anchor warp is used:	kg	
Actual weight of yacht in conditions as described above in kg excl. corrector weights:	kg	
Total weight of corrector weights in kg: Weights positioned according to Appendix H6 of class rules	kg	
Actual weight of yacht in conditions as described above including above corrector weight in kg:	kg	

MEASURER'S NAME:
ADDRESS
Street:
Postal code:
Town:
Country:

Phone:	Mobile phone:
Email:	
Date:	Signature:

MEASUREMENT FORM FOR WEIGHT

X-35 ONE DESIGN

Standard equipment included in class weight	Each item listed below must be signed by measurer & owner	
	Measurer	**Owner**
Anchor and anchor warp		
Mast		
Rig		
Boom		
Vang incl strop		
Cunningham incl 3 blocks		
Mainsheet		
3 blocks for mainsheet		
Sheet for "main traveller"		
Reef 1 rope		
Backstay incl blocks		
Haul for genoa cars		
Cunningham		
Mainsail halyard		
Combi halyard STB + Port		
Genoa halyard		
Emergency tiller		
8 blocks at mast collar		
Permanently mounted optional equipment can be included in the class weight	Each item listed below must be signed by measurer & owner if they are part of yachts' class weight requirement	
	Measurer	**Owner**
Hot water installation		
Chart plotter		
Cooling compressor		
Heating system		
Holding tank with fittings		
Radio/CD with speakers		
2 cockpit loudspeakers		
Electronic instrumentation		
Magnetic compass		
Primer		

Antifouling		
Sprayhood fittings permanently mounted		
Autopilot drive		
Shower in cockpit		
Race package excl pole and sheets		
Two cabinet sections in saloon		
Standard equipment NOT part of class weight	Each item listed below must be signed by measurer and owner	
	Measurer	**Owner**
Saloon table		
Loose seat cushions in saloon		
Equipment that is NOT part of class weight	Each item listed below must be signed by measurer & owner	
	Measurer	**Owner**
Spinnaker pole		
Spinnaker sheets		
Spinnaker guy sheets		
Winch handles		
Mooring ropes		
Fenders		
Genoa sheets		
Shore power cable		
Barberhaul ropes		
Downhaul ropes		
Hoiest strop		
Boom cover		
Spare sheets		

MEASURER REPORT .....

.....

.....

.....

.....

.....

.....

.....

.....

.....

MEASURER REPORT .....

.....

.....

.....

.....

.....

.....

.....

.....

.....

.....

.....

.....

.....

X-35 ONE DESIGN CHANGE OF OWNERSHIP - SAILS			
PREVIOUS X-35 HULL NO:	**SAIL STICKER NO**	**CHANGE OF OWNERSHIP DATE**	**X-35 ICA CONFIRMATION DATE**

NEW OWNER'S NAME: ..... **X-35 HULL NO:** .....

NEW OWNER'S DECLARATION I declare that I have taken ownership of the above mentioned sails.

Owner's signature .....